ACCESSIBILITY PROFESSIONALS FreedomShowers.com **1-877-947-7769**	Description: APFIGSS-240-QCR 24" Straight Grab Bar (Satin Stainless Finish)	Customer: Customer Part # 04-09-2021

INTERPRET GEOMETRIC
TOLERANCING PER: ASME Y14.5-2009
UNLESS OTHERWISE SPECIFIED:
DIMENSIONS ARE IN INCHES [MM]

TOLERANCES:	DECIMALS	
FRACTIONAL±1/64	.X	±0.1
ANGLES±1°	.XX	±0.02

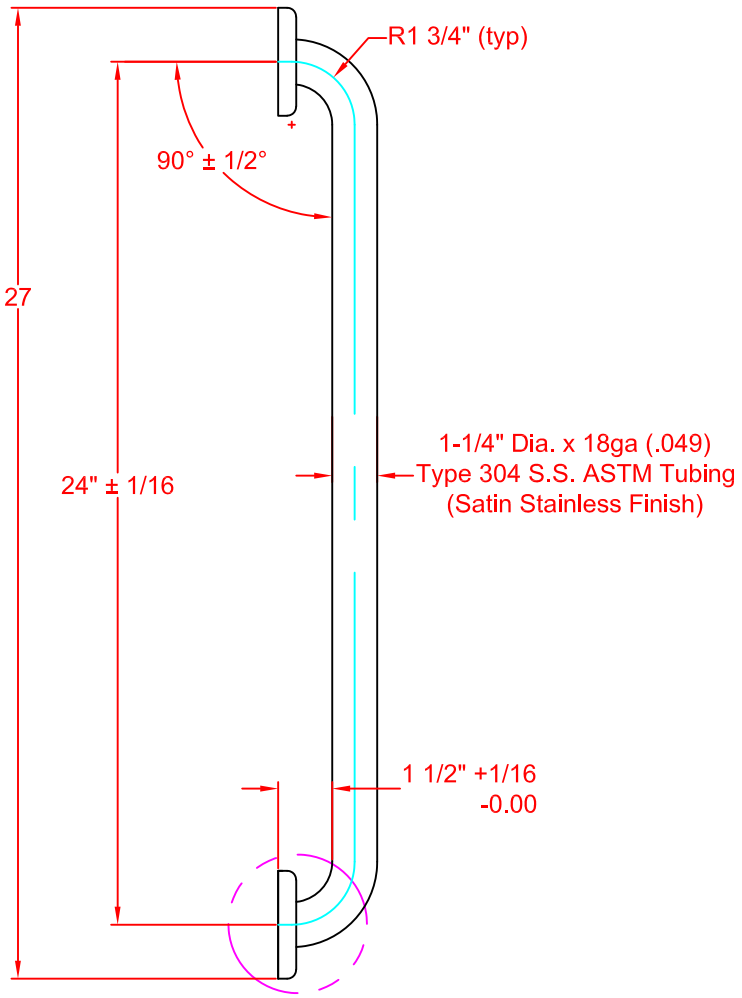

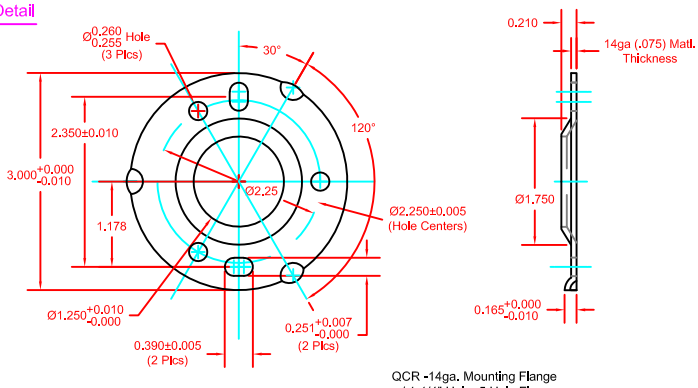

QCR -14ga. Mounting Flange
w/ 1-1/4" Hole, 5 Hole Flange.